(No Model.)

2 Sheets—Sheet 1.

# J. G. HALLSTROM.

## ATTACHMENT FOR WOODWORKING LATHES.

No. 569,197. Patented Oct. 13, 1896.

Fig. 1.

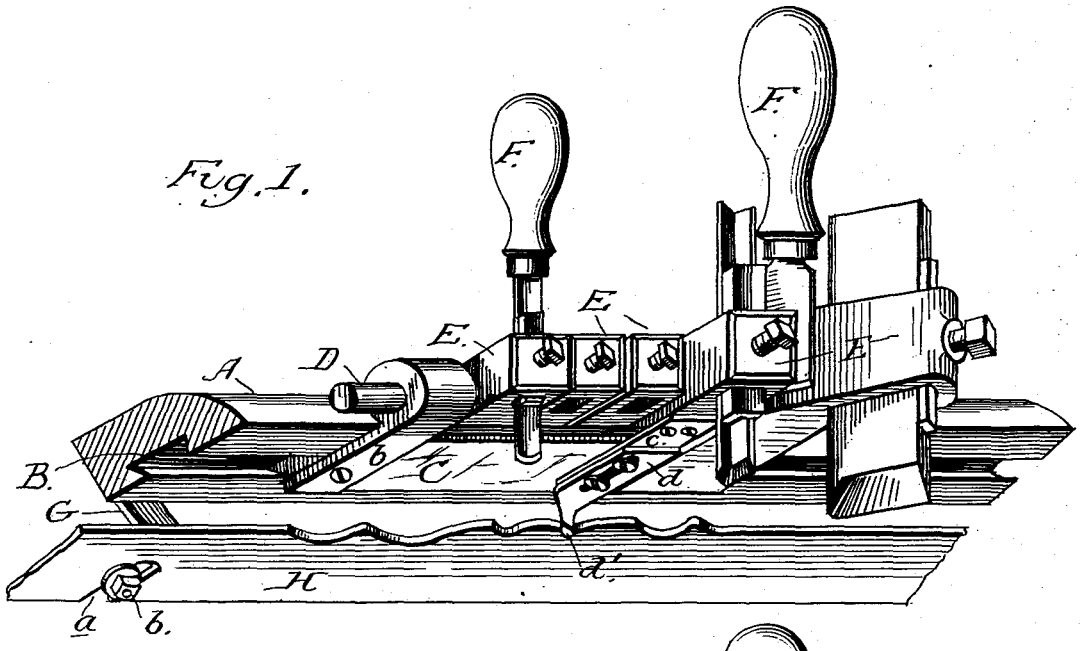


Fig. 2.

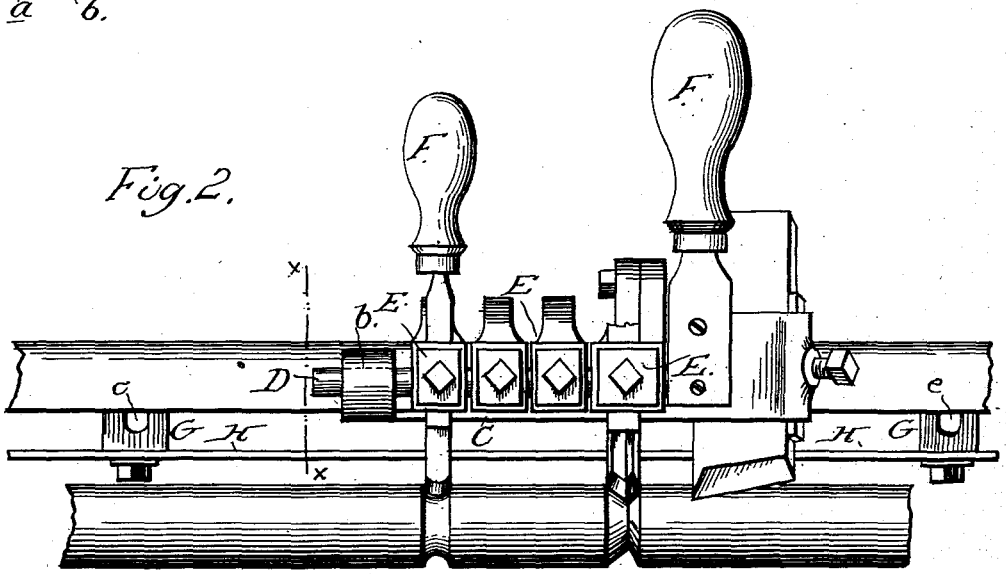


WITNESSES

Chapman W. Fowler.

Thomas W. Fowler

INVENTOR

John G. Hallstrom

by P. Walter Fowler

his Attorney

THE NORRIS PETERS CO., PHOTO-LITHO., WASHINGTON, D. C.

(No Model.) 2 Sheets—Sheet 2.

# J. G. HALLSTROM.

## ATTACHMENT FOR WOODWORKING LATHES.

No. 569,197. Patented Oct. 13, 1896.

Fig. 3.

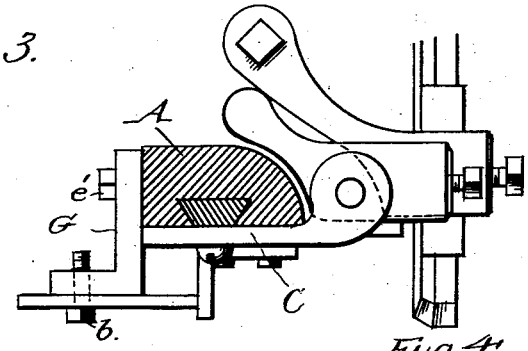


Fig. 4.

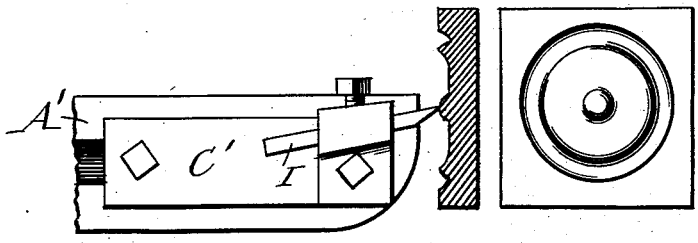


Fig. 6

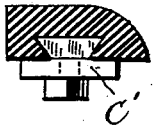


Fig. 5.

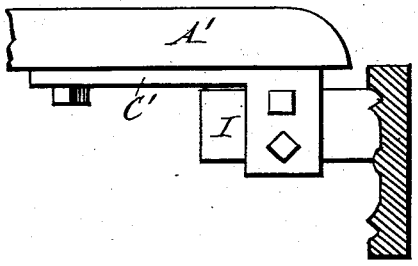


WITNESSES

Chapman W. Fowler.

Thomas W. Fowler.

INVENTOR

John G. Hallstrom

by T. Walter Fowler

his Attorney

THE NORRIS PETERS CO., PHOTO-LITHO., WASHINGTON, D. C.

# UNITED STATES PATENT OFFICE.

JOHN G. HALLSTROM, OF JAMESTOWN, NEW YORK.

## ATTACHMENT FOR WOODWORKING-LATHES.

SPECIFICATION forming part of Letters Patent No. 569,197, dated October 13, 1896.

Application filed May 5, 1896. Serial No. 590,281. (No model.)

*To all whom it may concern:*

Be it known that I, JOHN G. HALLSTROM, a citizen of the United States, residing at Jamestown, in the county of Chautauqua and State of New York, have invented certain new and useful Improvements in Wood-Turning-Lathe Rests, of which the following is a specification, reference being had therein to the accompanying drawings.

My invention relates to certain new and useful improvements in attachments for wood-working-lathes which are designed for various kinds of work and in which the various knives or cutters may be accurately adjusted and maintained in perfect position during the time the machine is in operation, and the attachment caused to slide longitudinally, by means of handle-pieces on the same, so that the cutter or cutters may operate upon the stick with uniformity and precision throughout its length.

My invention consists, essentially, of a member secured to the frame of the lathe and provided with a groove at one side only of the axial line of the work and a combined rest and tool-holder having a member to engage and slide in said groove, whereby the attachment may be manually slid longitudinally along the frame of the lathe and the knife or cutter adjusted with accuracy with relation to the object to be acted upon.

My invention also consists of the parts and the constructions and combinations of parts which I shall hereinafter fully describe and specifically claim.

Referring to the accompanying drawings, in which corresponding letters of reference indicate like parts, Figure 1 represents a perspective view of a lathe attachment and its adjuncts constructed to embody my invention. Fig. 2 is a front elevation of the same. Fig. 3 is a cross-sectional view on the line *x x* of Fig. 2. Figs. 4, 5, and 6 illustrate modifications to be hereinafter referred to.

In the present instance I have omitted to show the frame of the lathe and its usual head-stock, tail-stock, &c., and have simply illustrated my improved attachment as detached from the lathe, it being understood that said attachment is capable of use on most, if not all, of the types of woodworking-lathes now in general use.

To some convenient part of the frame of the lathe and extending longitudinally along the same and being fixedly secured to or an integral part thereof, if desired, is a bar or member A, of metal, having in its under side and extending the whole or the major portion of the bar a groove B, preferably of dovetail form in cross-section, as shown in Figs. 1 and 3. Within this groove, which is located upon one side only of the axial line of the work, is fitted and adapted to move the slide C, from which arms *b* extend and have their outer ends formed with bearings for a shaft or rod D, which extends parallel with the slide and essentially in the horizontal plane thereof. Upon this rod the knife-holders E are hung so that they may swing about the same, said holders being of any desired number and form and adapted to securely and adjustably hold the knives or cutters in any well-known and appropriate manner. In the present instance in Figs. 1 and 2 I have illustrated five of the holders, two of which are provided with knives or cutters; but it will be understood that any number and design of holders and cutters may be carried by the sliding attachment herein shown, and each knife or cutter may have its own handle extended upwardly, or there may be a handle-piece F fixedly secured to the attachment or to one of the holders for the purpose of furnishing a convenient means for manually moving the attachment and its adjuncts longitudinally along the machine essentially on the same principle as a feed-screw operates upon the rests or stocks of both metal and wood working lathes.

To the rear side of the grooved bar or member in which the rest and tool-holders are fitted are bolted angle-plates G, and to the lower horizontal members of the same is secured a pattern H of any desired form, said pattern being provided with slots *a*, in which engage set-screws *b*, which adjustably secure the pattern in position.

In Fig. 1 the holder which carries one of the knives or cutters has secured to its under side a plate *c*, to which is adjustably secured by set-screws a second plate *d*, with a down-turned arm *d'* adapted to run in contact with the formative edge of the pattern, as shown, whereby the holder to which these plates are

secured will be automatically raised and lowered as the downturned arm $d'$ travels in contact with the elevations and depressions of the pattern. Each of the devices thus far described, except the pattern and the means for securing it, is mounted on and is to be moved with the attachment, the slide whereof operates freely in the groove in the bar or member A, as before described. The angle-plates G, which secure the pattern to the grooved bar A, are also formed with slots $e$, which are engaged by set-screws or bolts $e'$, whereby the distance between the bar A and the pattern and the relative positions of these parts may be adjusted as the circumstances require.

In Figs. 4, 5, and 6 an essential portion of my invention is shown in connection with a knife or cutter for forming a rosette. In these instances the grooved bar A′ receives the head of the slide C′, the said slide having a rigid knife-holder at or near its outer end and provided with one or more set-screws for adjustably holding the rosette knife or cutter I of suitable form and construction. In these figures, as well as in Figs. 1, 2, and 3, the slide which carries the knives or cutters and their adjuncts are maintained in perfect position and are accurately guided by the sliding engagement of the slide in the groove of the bar A or A′. This attachment of the slide and the free sliding movement it is permitted to have in the groove of the bar and the mounting of all of the essential elements of the attachment upon the slide simplifies the manipulation of the cutting appliances and renders the work of the cutters a matter of ease and certainty. By the devices and arrangements described I am enabled to turn a piece of wood anywhere from one-quarter of an inch to two and one-quarter inches in diameter, after the knives are once adjusted, without stopping the machinery or altering the positions or alinement of the knives, while the iron pattern shown in Figs. 1, 2, and 3, and the engagement therewith of the downturned extension of the adjustable plate $d$, gives to the knife or cutter with which it is connected such a precise direction as is difficult to obtain by hand in the usual manner. By simply raising the handle the knife or cutter may be made to cut into the block of wood as shown in Fig. 2, this being because of its fixed position in the slide and the latter's attachment and slidable action in the groove of the bar or member A. This grooved member also serves as an accurate guide for the rod D upon which the knife-holders are pivotally hung, thereby maintaining the knives in proper position for best service, and this same groove in the bar or member A provides an easy, safe, inexpensive, and natural guide for the positions of the knives and all the tools used in turning a piece of wood combining the automatic method and the use of the hands.

Having thus described my invention, what I claim as new, and desire to secure by Letters Patent, is—

1. A lathe attachment to be manually operated and comprising a grooved bar at one side only of the axial line of the work, a slide mounted in said groove and having a head extending along the same, a knife-holder extending laterally from the slide and a knife in said holder, said slide and holder being so connected that they may be jointly and freely moved along the grooved bar, by hand, so that their relative positions may be maintained.

2. In a lathe attachment designed to be operated by hand, the combination, with a fixed grooved bar or member upon one side only of the axial line of the work, of a rest comprising a slide to engage and to be moved, by hand, along said grooved bar or member, and having laterally-projecting arms provided with bearings in their outer ends, a shaft carried in said bearings and maintained parallel with said groove, and a centrally-hung knife-holder pivotally mounted on said rod and adapted to receive a knife or cutter.

3. In a lathe attachment adapted to perform various kinds of work, the fixed grooved bar or member at one side only of the axial line of the work, in combination with a rest comprising a slide having a head to engage and operate along said groove, and provided with outwardly-extending arms, a shaft parallel with the groove and having its opposite portions mounted in bearings in the outer extremities of said arms, knife-holders pivotally hung upon said shaft and having the outer ends adapted to receive knives or cutters, and a handle on the rest whereby the latter and its attachments may be manually adjusted along the grooved bar to cause its knives or cutters to operate upon the piece to be turned for substantially the full length thereof.

4. In a lathe attachment adapted to perform various kinds of work, the fixed bar or member having a groove extending longitudinally along it at one side only of the axial line of the work, in combination with a rest adapted to be manually operated and having a slide to engage and operate within said groove, a rod mounted in the rest parallel with the groove, a pattern removably and adjustably secured below the grooved bar or member, a holder adapted to swing upon the rod, and provided with a knife or cutter, and a plate adjustably fitted to the under side of the holder, having a downturned extension to engage the pattern whereby the holder is automatically raised and lowered during the movement of the rest along the grooved bar or member.

5. In a lathe attachment adapted to perform various kinds of work, the combination, of a fixed grooved bar or member on one side only of the axial line of the work, a rest to be manually operated and having a slide to operate in said groove, and having horizontal arms projecting laterally from the under side

of the bar, and provided with bearings, a shaft or rod mounted in said bearings parallel with the groove of the bar or member, knife-holders hung upon said shaft or rod, knives or cutters adapted to be adjustably mounted in the holders, a pattern below the grooved bar or member and the angular plates and securing means whereby the pattern is adjustably held and supported from the bar or member.

In testimony whereof I affix my signature in presence of two witnesses.

JOHN G. HALLSTROM.

Witnesses:

OLOF A. OLSON,

CARL W. ALLBERG.